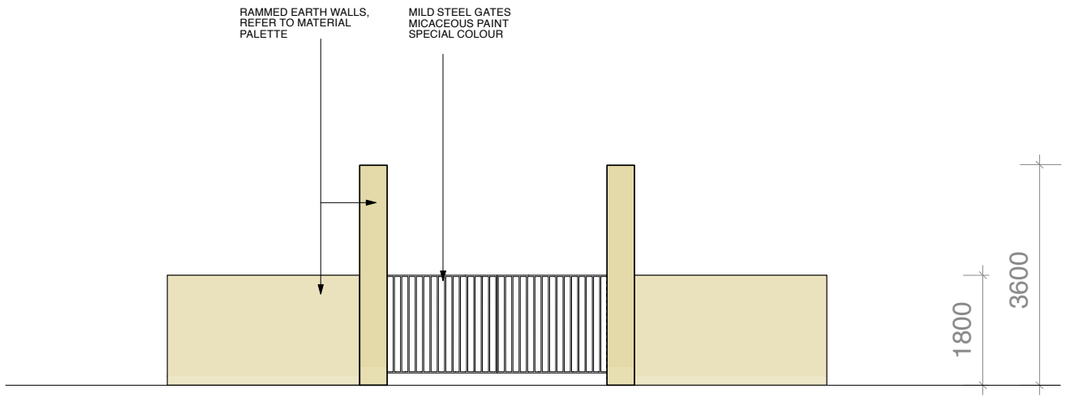

ELEVATION A

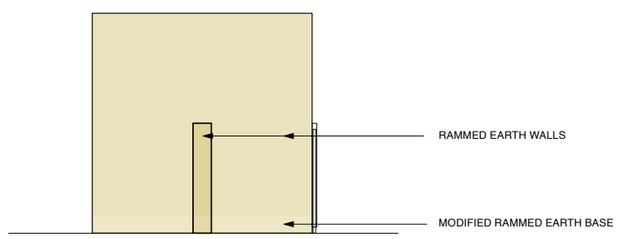

ELEVATION B

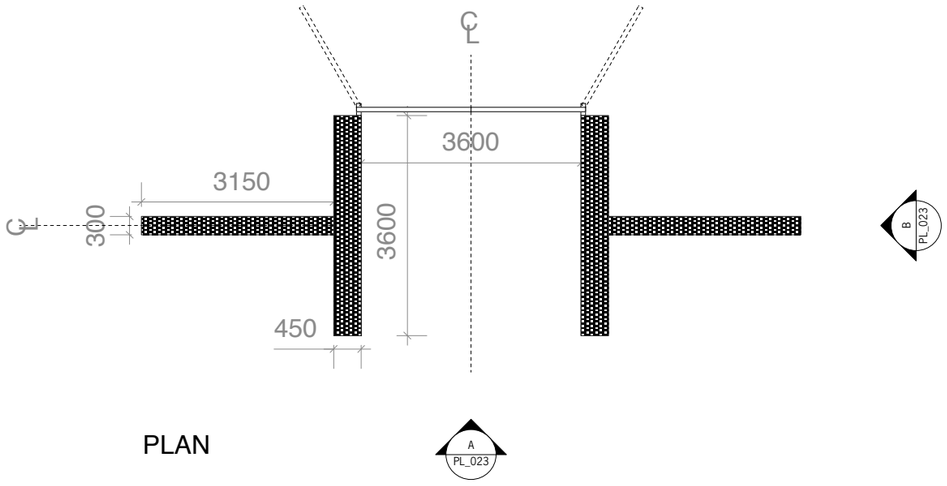

PLAN

NOTE:
For location & context,
Please refer to Landscape Architect's drawing -
Bagby Lane Entrance 323.503

General notes:
1. Do not scale drawings. Dimensions govern.
2. All dimensions are in millimeters unless noted otherwise.
3. All dimensions shall be verified on site before proceeding with the work.
4. Buschow Henley shall be notified in writing of any discrepancies.

Specific notes:

Rev.	Date	Issue Details	

Architects

buschow henley
BUSCHOWHALEBROWNHENLEYRORRISON

21 Perserverance Works 38 Kingsland Road London E2 8DD
Tel: 020 7033 9700 E-mail: studio@buschowhenley.co.uk

Title

Proposed entrance gate posts from Bagby Lane

© Buschow Henley Ltd. www.buschowhenley.co.uk

Client

Bagby Airfield

Project

Bagby Airfield

Date	Originator	Scale@A3	Scale@A1
01.04.08	NC	1:100	1:50

Status	Dwg. no.	Rev.
PL Planning	0715_PL_023	